Winglock

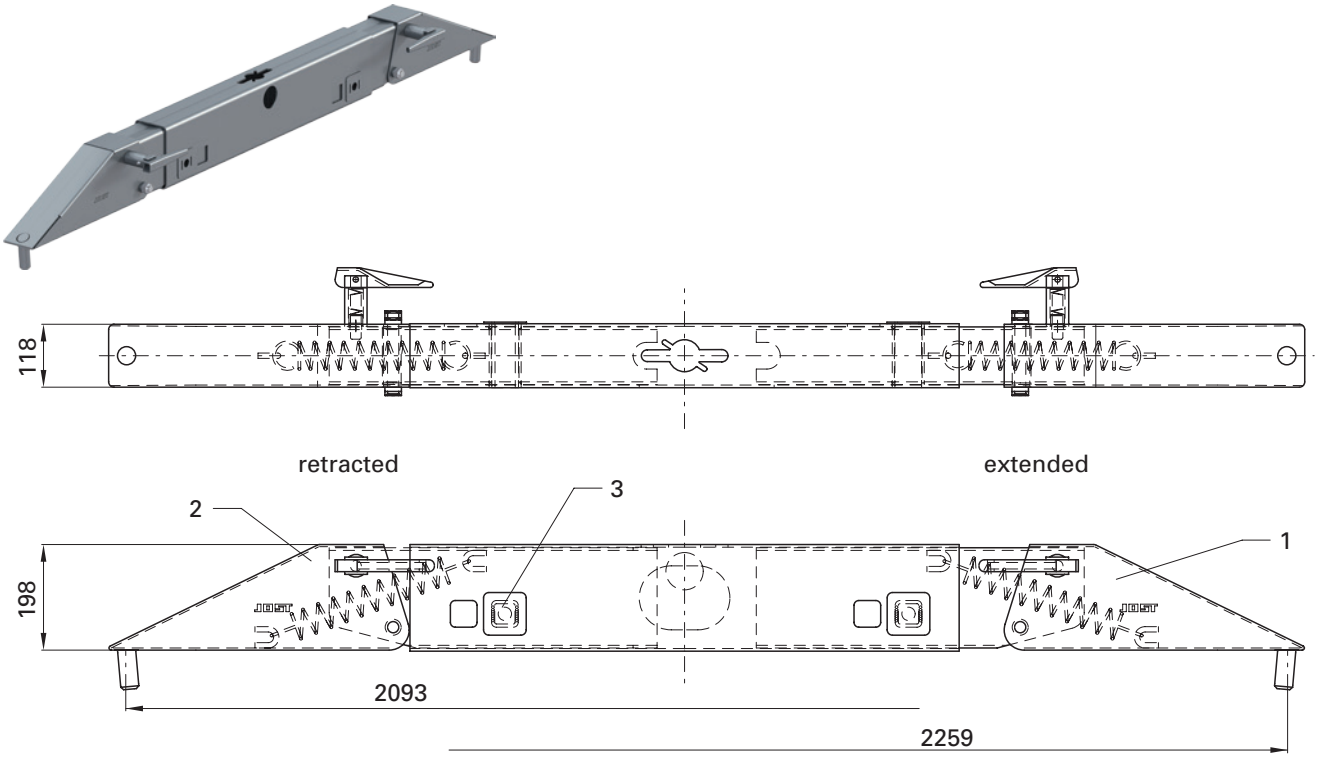

Application: Gooseneck chassis in frontal position
Suitable for transporting 45' Euro containers in compliance with the maximum vehicle lengths of European Directive 96/56/EC.
Surface: compl. raw

Selection table / available versions

Weight (kg)	Order No.	Drawing No.
72.0	QT FB45FT	410.140.000

Spare parts

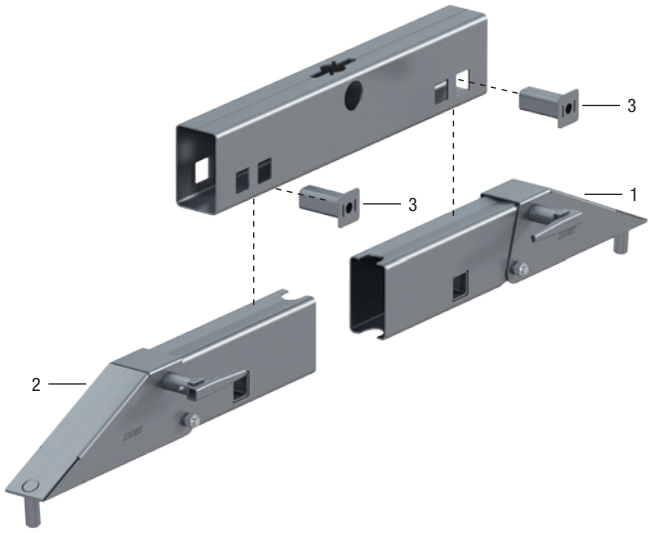

Item	Description	Order No.
1	45'-Insert right	410.140.410
2	45'-Insert left	410.140.420

Accessories

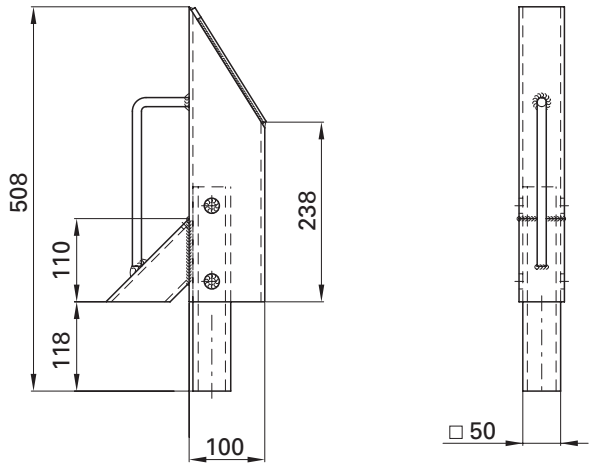

Stud for winglock

Application: Support tool for containers to replace the standard pins in the winglock.
Surface: hot-dip galvanised

Selection table / available versions

Weight (kg)	Order No.	Drawing No.
7.0	410.140.500	410.140.500

Accessories

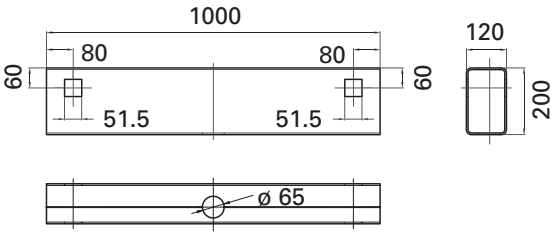

Center section

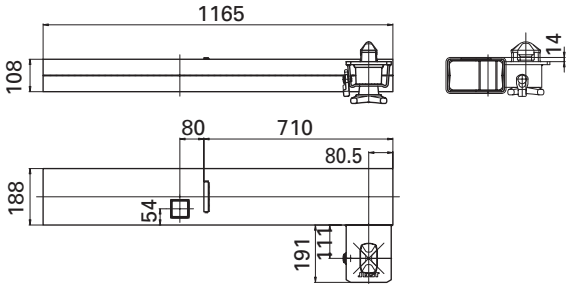

Insert right / left

Accessories for 40'position

Selection table / available versions

Weight (kg)	Order No.	Drawing No.
23.0	410.140.100	410.140.000

Surface: Center section raw and inserts raw, locking parts galvanised.

Accessories for 40'position

Selection table / available versions

Version	Weight (kg)	Order No.	Drawing No.
right	28.0	410.140.210	410.140.210
left	28.0	410.140.220	410.140.220