QT HV

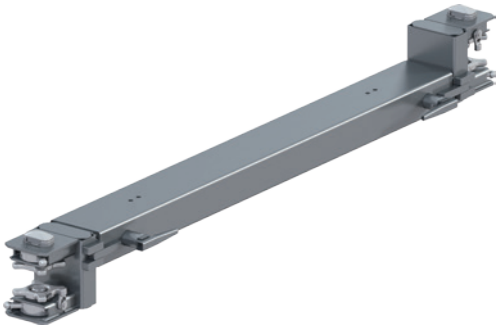

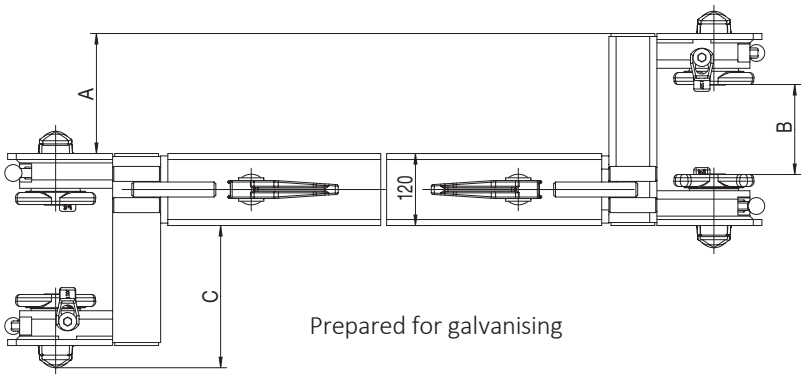

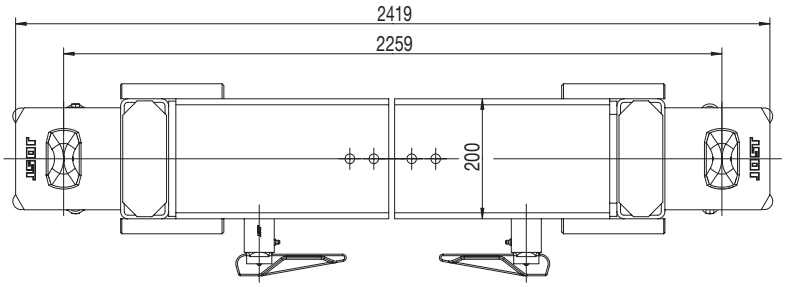

Secure cross-member correctly, as well as fitting suitable centre supports on vehicle to provide vertical load support for the entire weight of the container.

Selection table / available versions

Rec. gross container weight* (max. kg)	A (mm)	B (mm)	C (mm)	Weight (kg)	Inner parts identical with	Order No.	Drawing No.
18.000	120	70	157	139.2	R 405 VAK	QT HV120-05	410.199.000
18.000	150	100	187	140.7	R 405 VAK	QT HV150-05	410.203.000
18.000	200	150	237	143.2	R 405 VAK	QT HV200-05	410.200.000

* Depends on the centre to centre distance between the longitudinal supports.
Locking parts galvanised, welding assemblies primend, mounted

Spare parts

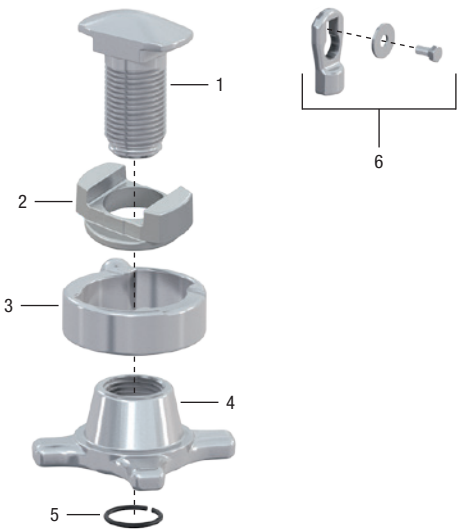

Item	Description	Order No.
1	Locking pin	915.000.276
2	Guide bush	915.000.191
3	Outer bush	915.000.274
4	Locking nut	915.000.275
5	Locking ring	915.000.187
6	Latch kit	905.159.500