FB 55 HL

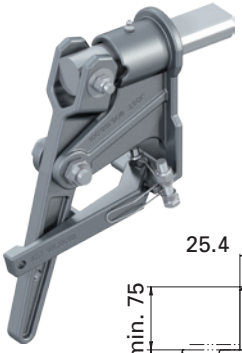

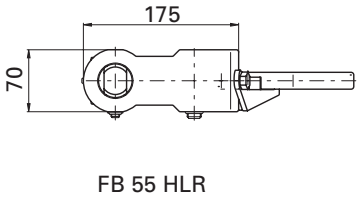

FB 55 HLR

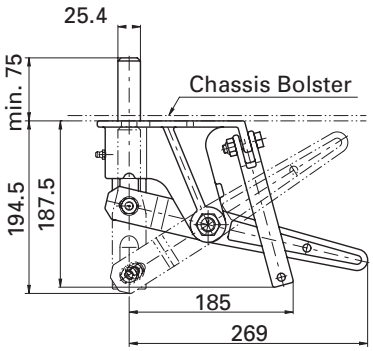

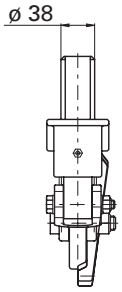

Application: Gooseneck chassis in frontal position
rec. gross container weight: max. 34.000 kg
cannot be screwed down and non-retractable

Selection table / available versions

Versions	Weight (kg)	Order No.	Drawing No.
Installation in the direction of travel, right	5.8	FB 55 HLR	905.206.010
Installation in the direction of travel, left	5.8	FB 55 HLL	905.206.020

Spare parts

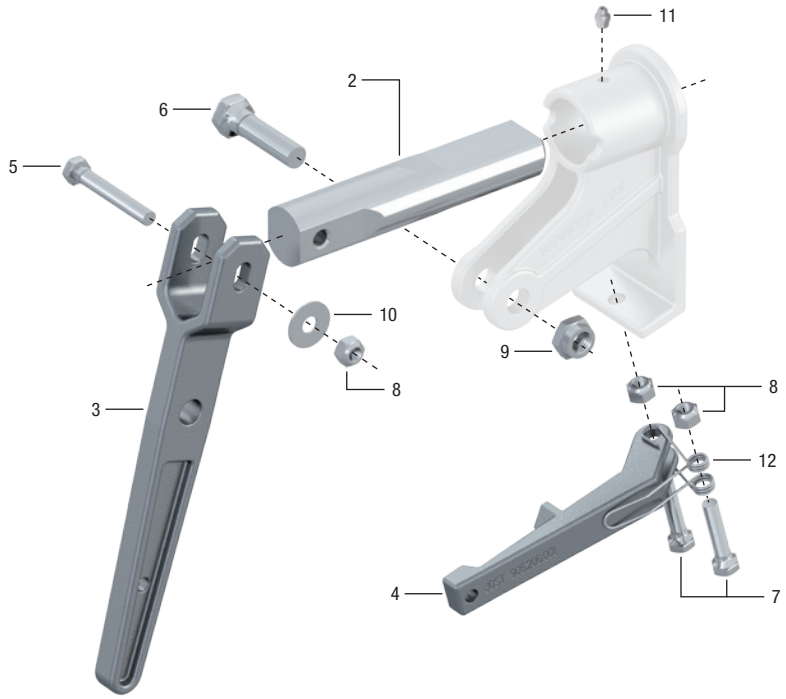

Item	Description	Order No.
1	Housing	905.156.001
2	Locking bar bolt	915.156.002
3	Handle	915.156.003
4	Latch	915.206.001
5	Hex screw	000.001.175
6	Hex screw	000.001.061
7	Hex screw	000.001.125
8	Hex nut	NT0000400
9	Hex nut	000.002.001
10	Washer	000.006.047
11	Grease nipple	640.000.007
12	Spring	000.009.002